Section 6–1 Half and Full Adders:

1. For the full-adder of Figure 6–4, determine the outputs for each of the following inputs:

(b) $A = 0, B = 1, C_{in} = 1$

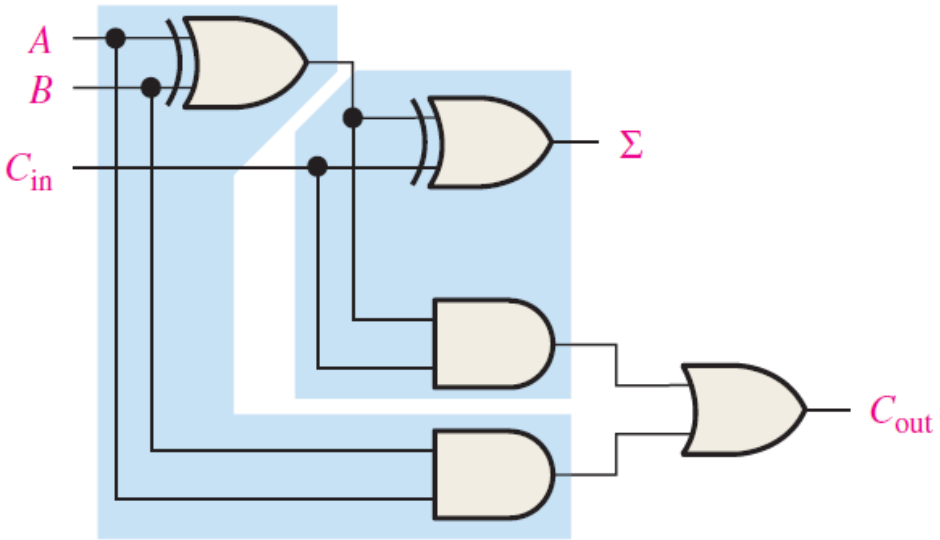

FIGURE 6–4

Section 6–2 Parallel Binary Adders:

4. For the parallel adder in Figure 6–69, determine the complete sum by analysis of the logical operation of the circuit. Verify your result by longhand addition of the two input numbers.

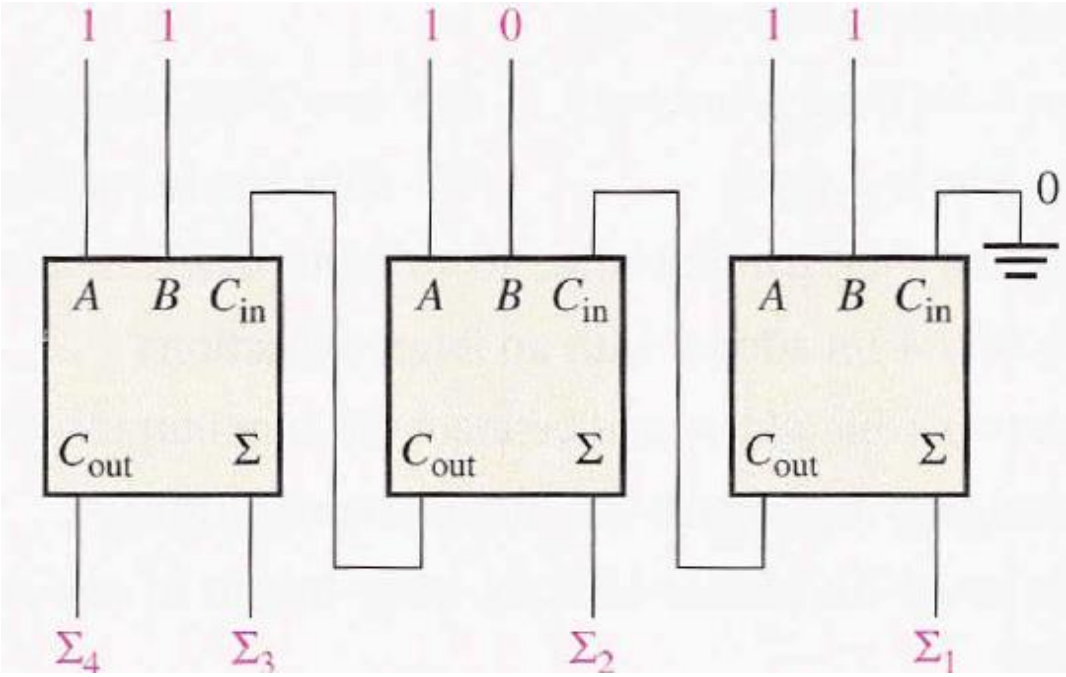

FIGURE 6–69

6. The circuit shown in Figure 6–71 is a 4-bit circuit that can add or subtract numbers in a form used in computers (positive numbers in true form; negative numbers in complement form). (a) Explain what happens when the $\overline{Add}/Subt.$ input is HIGH. (b) What happens when $\overline{Add}/Subt.$ is LOW?

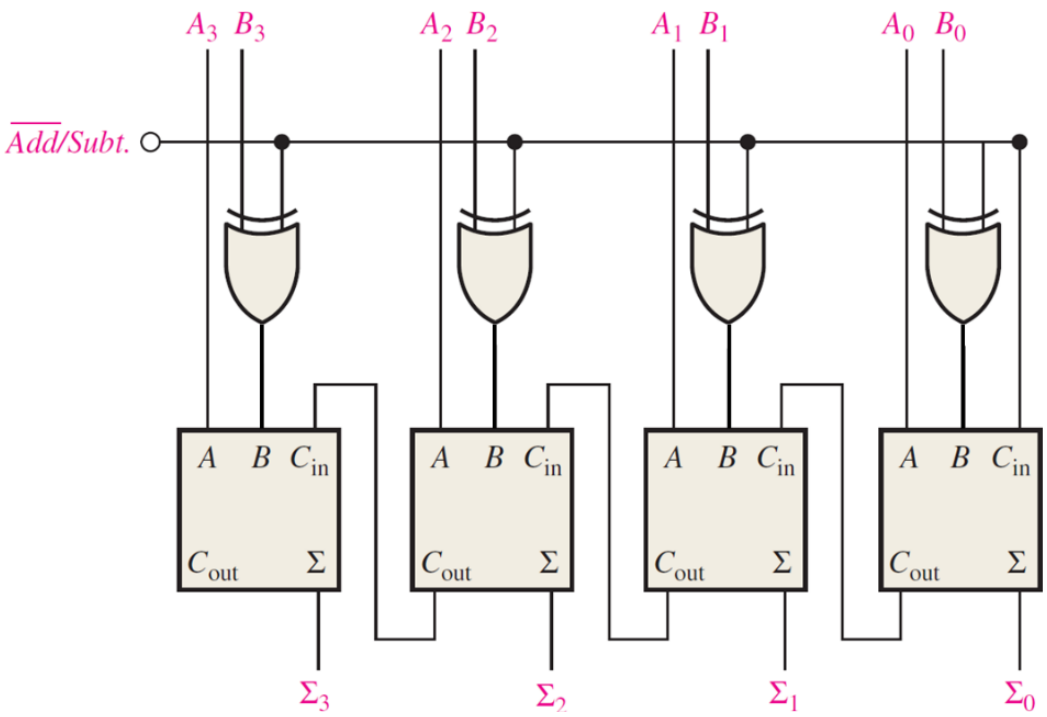

FIGURE 6–71

7. For the circuit in Figure 6–71, assume the inputs are $\overline{Add}/Subt. = 1, A = 1001, and\ B = 1100$. What is the output?

Section 6–4 Comparators:

13. The waveforms in Figure 6–73 are applied to the comparator as shown. Determine the output ($A = B$) waveform.

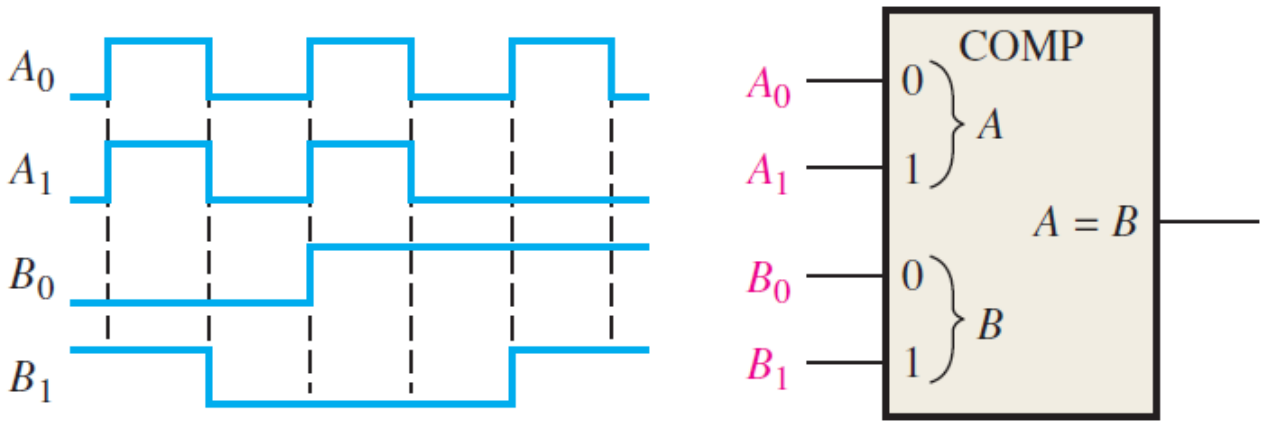

FIGURE 6–73

Section 6–8 Multiplexers (Data Selectors):

29. If the data-select inputs to the multiplexer in Figure 6–79 are sequenced as shown by the waveforms in Figure 6–80, determine the output waveform with the data inputs specified in Problem 28. $D_0 = 0$, $D_1 = 1$, $D_2 = 1$, $D_3 = 0$.

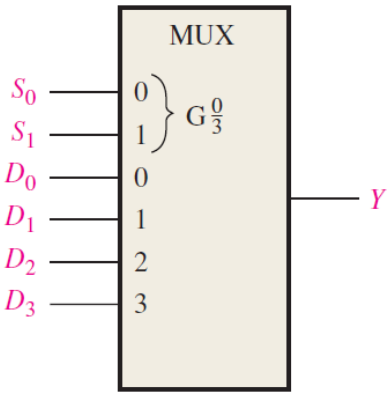

FIGURE 6–79

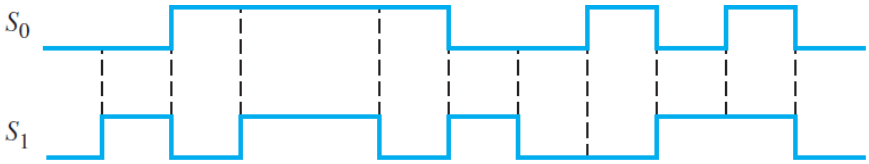

FIGURE 6–80

101. Design a 1-to-2 binary decoder with an active-high enable signal (E) using AND-OR logic.

102. Design a 2-to-4 binary decoder with an active-high enable signal (E) using 1-to-2 binary decoders.

103. Implement a 3-to-8 binary decoder using 1-to-8 demultiplexer.

104. Implement the function Z in each of the following cases using a binary decoder:

Inputs ABC	**Output** Z
0 0 0	1
0 0 1	0
0 1 0	1
0 1 1	0
1 0 0	0
1 0 1	0
1 1 0	1
1 1 1	0

(a) Truth Table

$$Z = A + \bar{B}$$

(b) Boolean Expression

105. Implement the same functions given in question 104 using a multiplexer.

Ch6

1 (b)

$A = 0, B = 1, C_{in} = 1$

$\Downarrow$

$\Sigma = 0$, $C_{out} = 1$

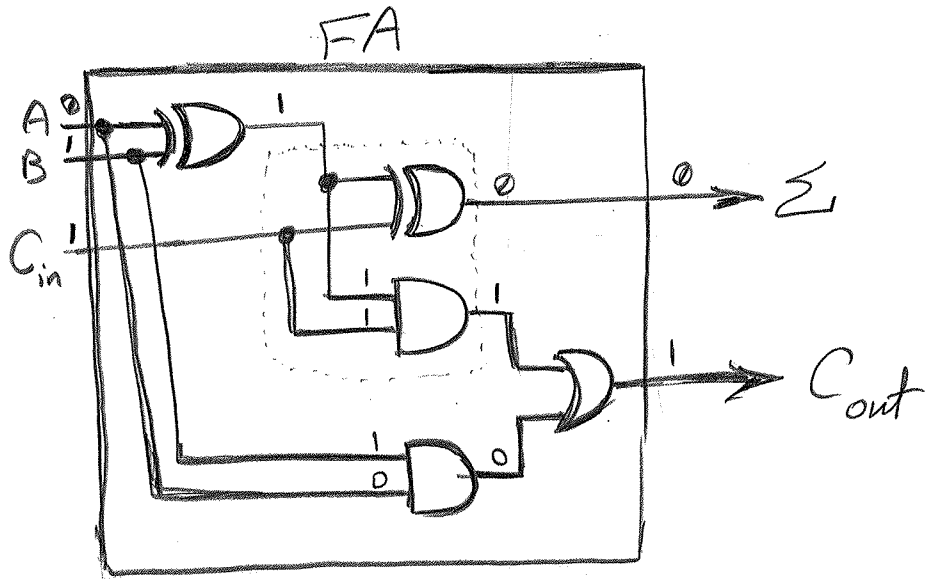

4

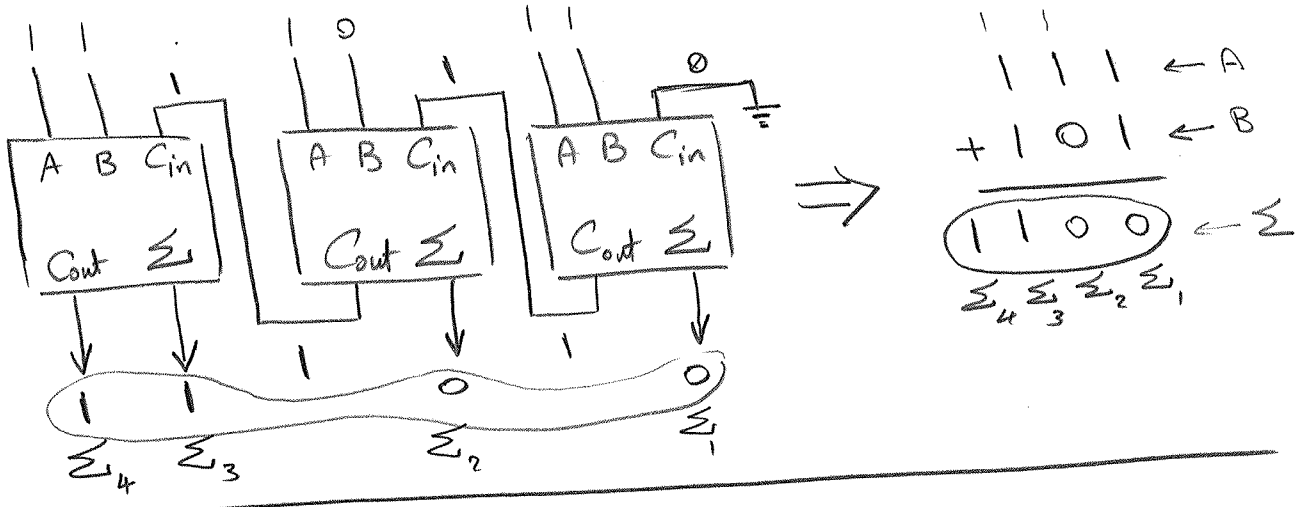

---

6 (a) $\overline{Add/Subt} = 1$

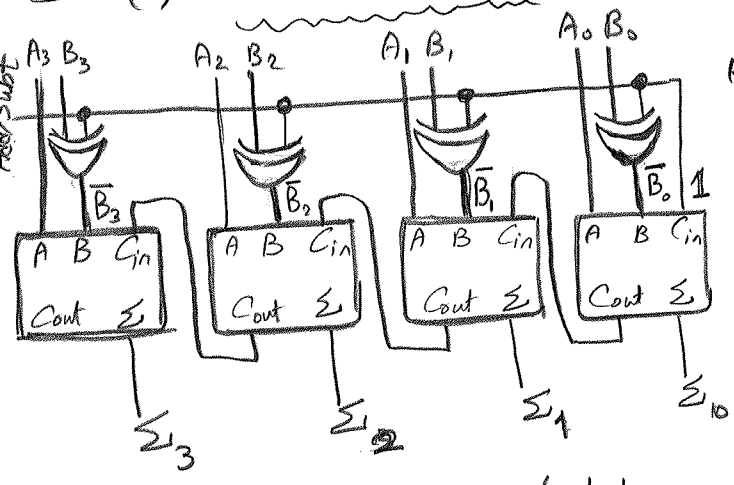

In this case the circuit behaves like a subtractor (for singned numbers in the 2's comp. form)

$\Sigma_3\Sigma_2\Sigma_1\Sigma_0 = A_3A_2A_1A_0 + \underbrace{\overline{B}_3\overline{B}_2\overline{B}_1\overline{B}_0}_{} + 1$

$\Sigma = A +$ 1's comp of $B + 1$

$= A +$ 2's comp of B

$\boxed{\Sigma = A - B}$

(b) $\overline{Add/Subt} = 0$

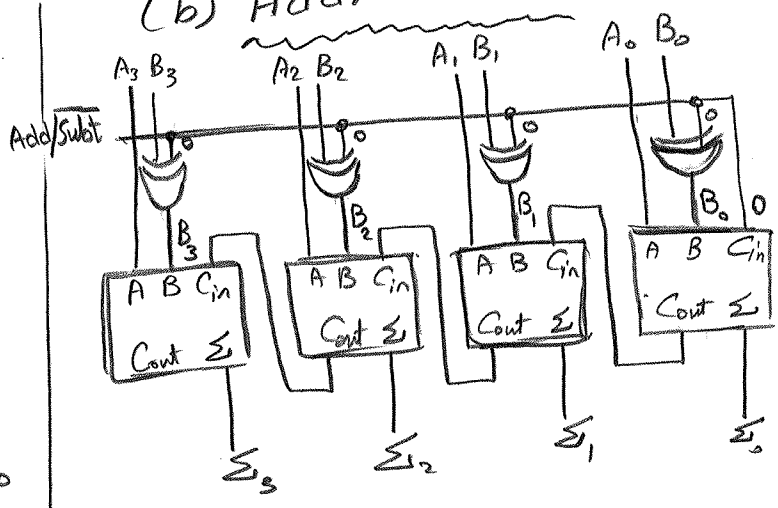

In this case the circuit behaves like the regular 4-bit adder:

$\Sigma_3\Sigma_2\Sigma_1\Sigma_0 = A_3A_2A_1A_0 + B_3B_2B_1B_0$

$\boxed{\Sigma = A + B}$

7 Add/subt

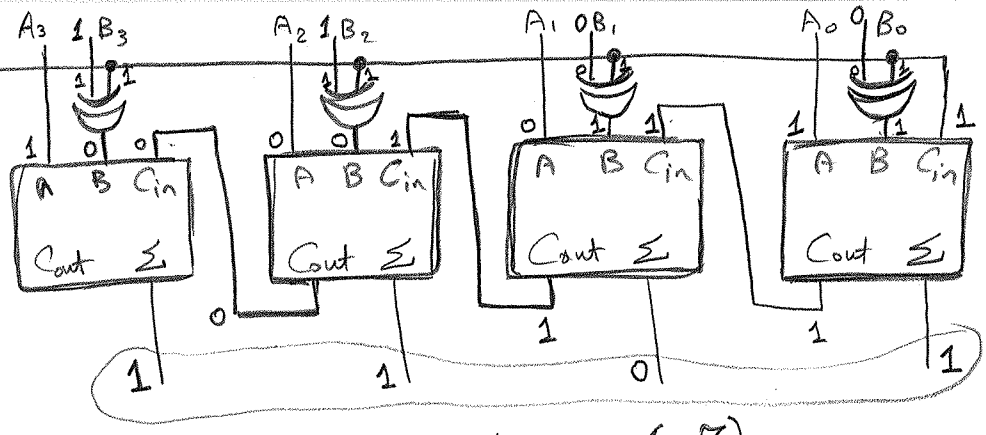

$$\begin{array}{r} 1001 \rightarrow (-7) \\ -\ 1100 \rightarrow (-4) \\ \hline 1001 \\ +\ 0100 \\ \hline 1101 \rightarrow -3 \end{array}$$

2's comp. of (−4) → 1's comp. of (−4) + 1

13

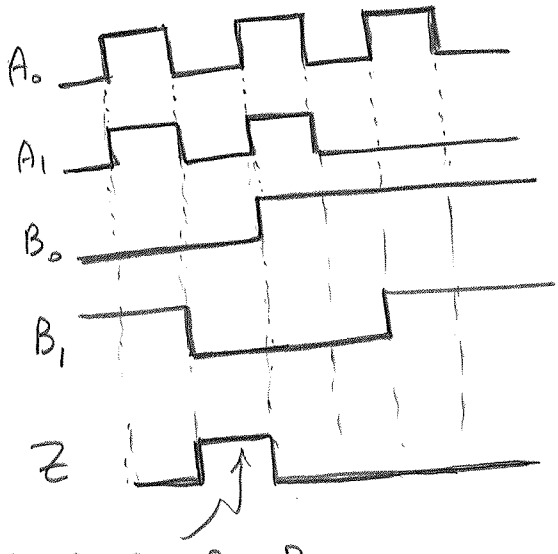

$A_0 = A_1$ & $B_0 = B_1$

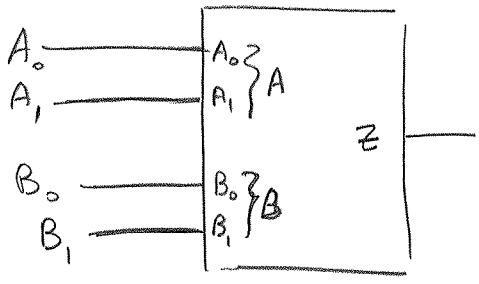

***** Design 1-to-2 Decoder with an active-high enable signal (E) using AND-OR Logic.

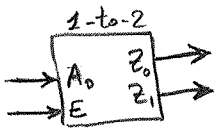

	E	A_0	Z_0	Z_1	
Disable	0	0	0	0	
	0	1	0	0	
Enable	1	0	1	0	→ $E\bar{A}_0$
	1	1	0	1	→ EA_0

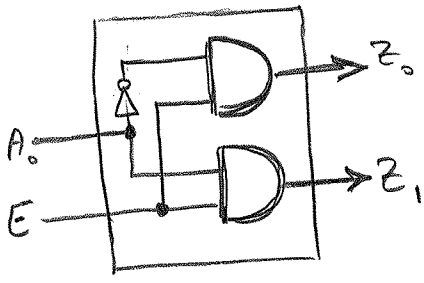

***** Design a 2-to-4 Decoder with an active-high enable signal (E)

1-to-2 Decoders.

2-to-4

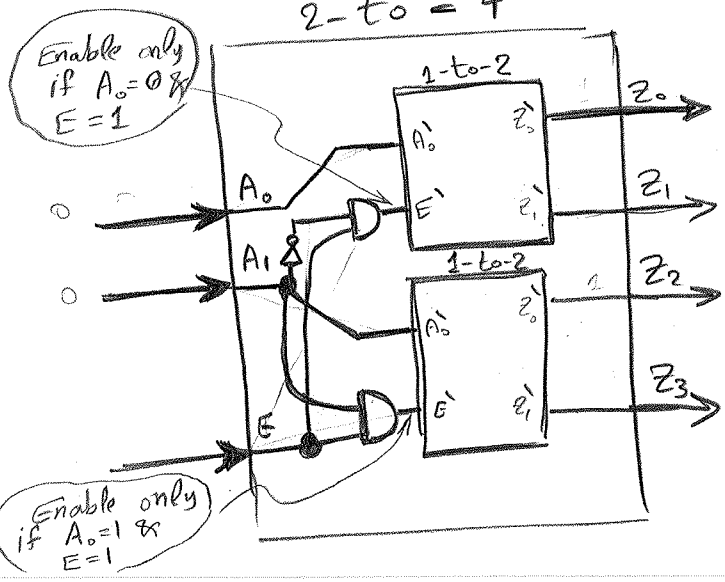

* Implement Z using a binary decoder

Given:

A	B	C	Z	
0	0	0	1	Z_0
0	0	1	0	
0	1	0	1	Z_2
0	1	1	0	
1	0	0	0	
1	0	1	0	
1	1	0	1	Z_6
1	1	1	0	

Solution:

Since we have 3 inputs

$\Longrightarrow$ we need a 3-to8 decoder

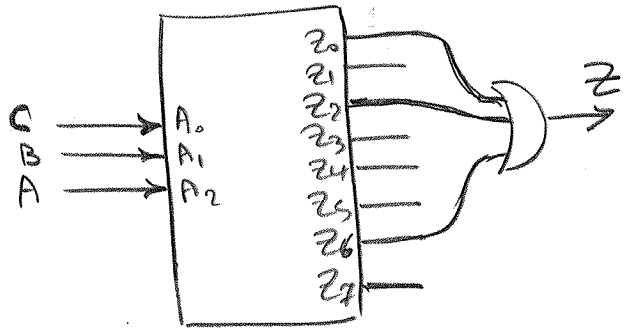

Given $Z = A + \bar{B}$

Solution:

First convert to standard SOP

$$Z = A(B+\bar{B}) + (\bar{A}+A)\bar{B}$$

$$= AB + A\bar{B} + \bar{A}B + \cancel{A\bar{B}}$$

$$= \underset{Z_3}{AB} + \underset{Z_2}{A\bar{B}} + \underset{Z_1}{\bar{A}B}$$

Since we have 2 inputs

$\Longrightarrow$ we need a 2-to4 decoder

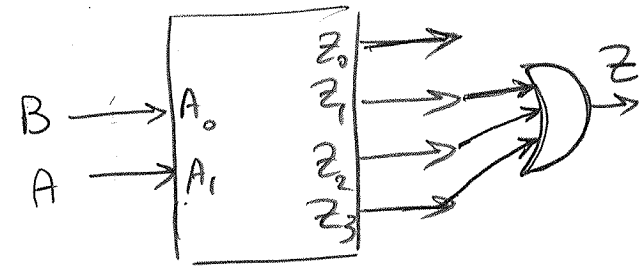

Ch6

29

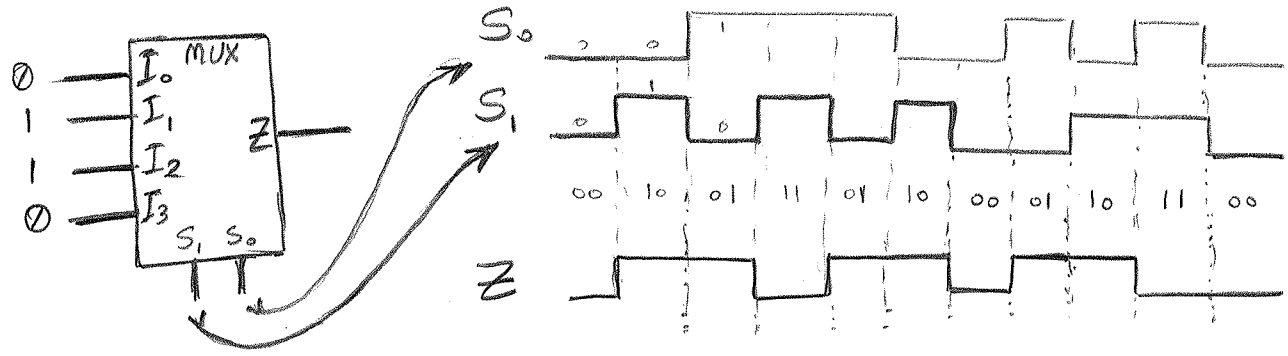

* Implement Z using a Mux:

Given:

A	B	C	Z
0	0	0	1
0	0	1	0
0	1	0	1
0	1	1	0
1	0	0	0
1	0	1	0
1	1	0	1
1	1	1	0

Solution:

Since we have $\boxed{3}$ i/p's $\Rightarrow$ we need to use a Mux with $\boxed{3}$ select lines $\Rightarrow$ 8-to-1

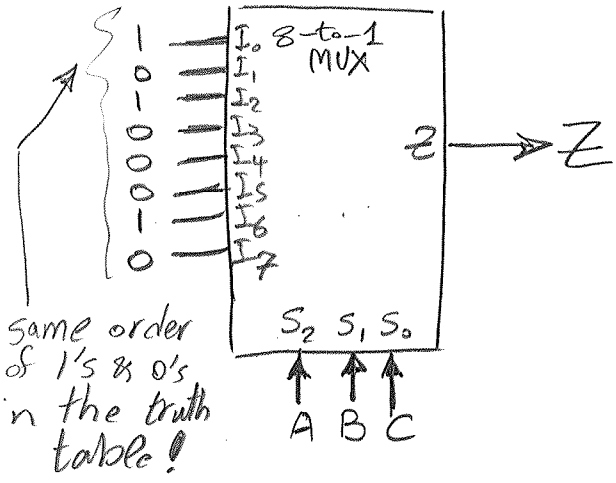

Given: $Z = A + \bar{B}$

Solution:

First convert to standard SOP

$$Z = A(B+\bar{B}) + (\bar{A}+A)\bar{B}$$
$$= AB + A\bar{B} + \bar{A}\bar{B} + A\bar{B}$$
$$= \underbrace{AB}_{I_3} + \underbrace{A\bar{B}}_{I_2} + \underbrace{\bar{A}\bar{B}}_{I_0}$$

Since we have $\boxed{2}$ i/p's $\Rightarrow$ we need a MUX with $\boxed{2}$ select lines $\Rightarrow$ 4-to-1

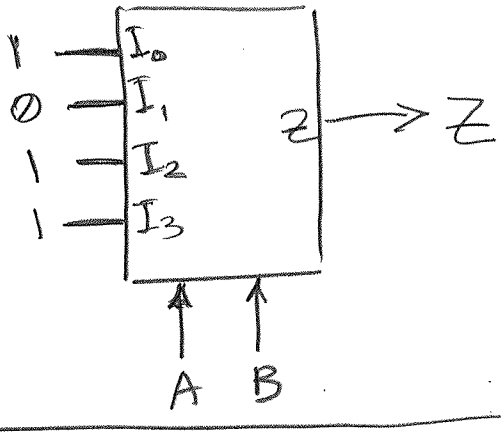
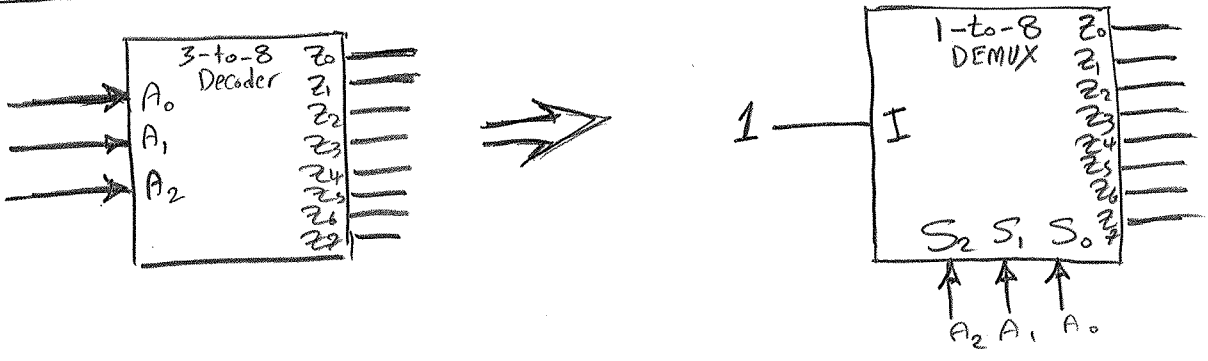
* Implement a 3-to-8 Decoder using a DEMUX